3560 Lafayette Rd., Building 2, Unit A
Portsmouth, NH 03801
www.qhtinc.com

Phone: 800-501-7697
Fax: 877-334-6401
info@qhtinc.com

September 15, 2022

To: All Sales Representatives.

Reference: Riva Part BI1201100

We received word from Biasi that part number BI1201100, 3-way valve actuator motor, has been discontinued and will no longer be available. This discontinuation will affect all Combi models.

We apologize for any inconvenience this may cause and will continue to work hard to source parts for the Riva line of boilers. Unfortunately, we cannot control the lead times and parts being discontinued by Biasi and their component manufactures overseas.

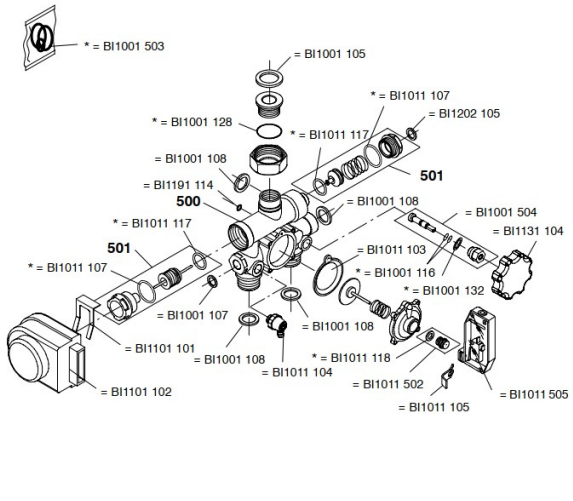

M35 Model

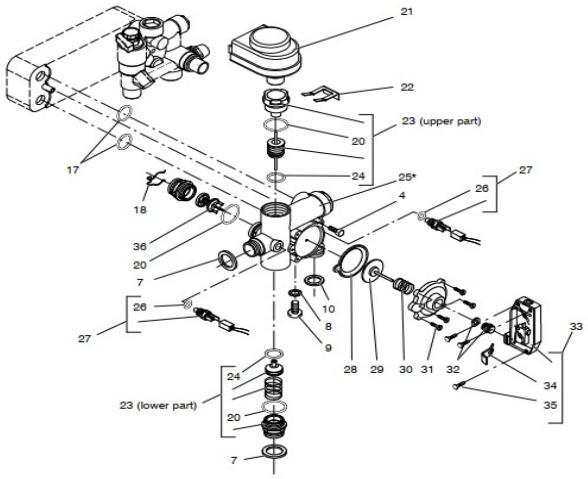

M130, M135, M210 Models (item 21)

Regards,

QHT, Inc